KLYO
Medical Systems, Inc.

OPERATING TABLE KL-10

www.klyomedical.com

PRODUCTO REGISTRADO - AGENCIA NACIONAL DE VIGILANCIA SANITARIA

CERTIFICACION DE CALIDAD:
ABNT NBR ISO 9001 - Sistema de Gestión de calidad - Requisito
ABNT NBR ISO 13485 - Productos para la Salud - Sistema de Gestión de Calidad - Requisitos regulatorios; Buenas PRACTICAS DE FABRICACION

CERTIFICACIONES DE PRODUCTO:
PORTARIA INMETRO - Certificado Obligatorio para equípos eléctricos sobre Vigilancia Sanitaria
ABNT NBR IEC 60601-1 - Equípo electromédico - Parte 1 - Requisítos Generales para seguridad básica y performance
ABNT NBR IEC 60601-1-2 - Norma: Compatibilidad Electromagnetica - Requisito y pruebas
ABNT NBR IEC 60601-1-4 - Norma: Sistemas programables electromédicos
ABNT NBR IEC 60601-2-46 - Requisitos partículares para seguridad básica y performance esencial de mesas MARCA
CE - CERTIFICACION EUROPEA
FDA - CERTIFICACION ESTADOS UNIDOS

OPERATING TABLE
KL-10

Our KL10, a manual surgical table with individual leg movement, is extremely versatile, ideal for general and specialty surgery.

Movement flexibility: greater angles that allow the surgeon to position the patient in accordance with the requirements of the procedure and technique used. The split legs give easier access to the patient during the procedure.

With a manual longitudinal movement, the table provides improved image access and free access to the arc in C.

Security and efficacy: The chassis structure with reinforced stainless steel offers high resistance and reliability. Its rectangular base gives absolute stability in maneuvers to meet the intended use, meeting the most stringent regulations of the hospital segment

The KL10 was designed to meet a demanding public seeking technological innovation , flexibility and quality with great cost-benefit in a product. The table is fully configurable and allows the inclusion of accessories to meet all surgical specialties .

OPERATING TABLE
KL-10

Our KL10 model is a manual surgical table with individual leg movement, is extremely versatile, ideal for general and specialty surgery.

- Manual column adjustments
- Electronic wheel brake
- Gas spring assisted, individual leg section movement
- Manual movements:
  - -Longitudinal shift
  - -Tilt
  - -Trendelenburg
  - -Reverse-Trendelenburg
  - -Back section

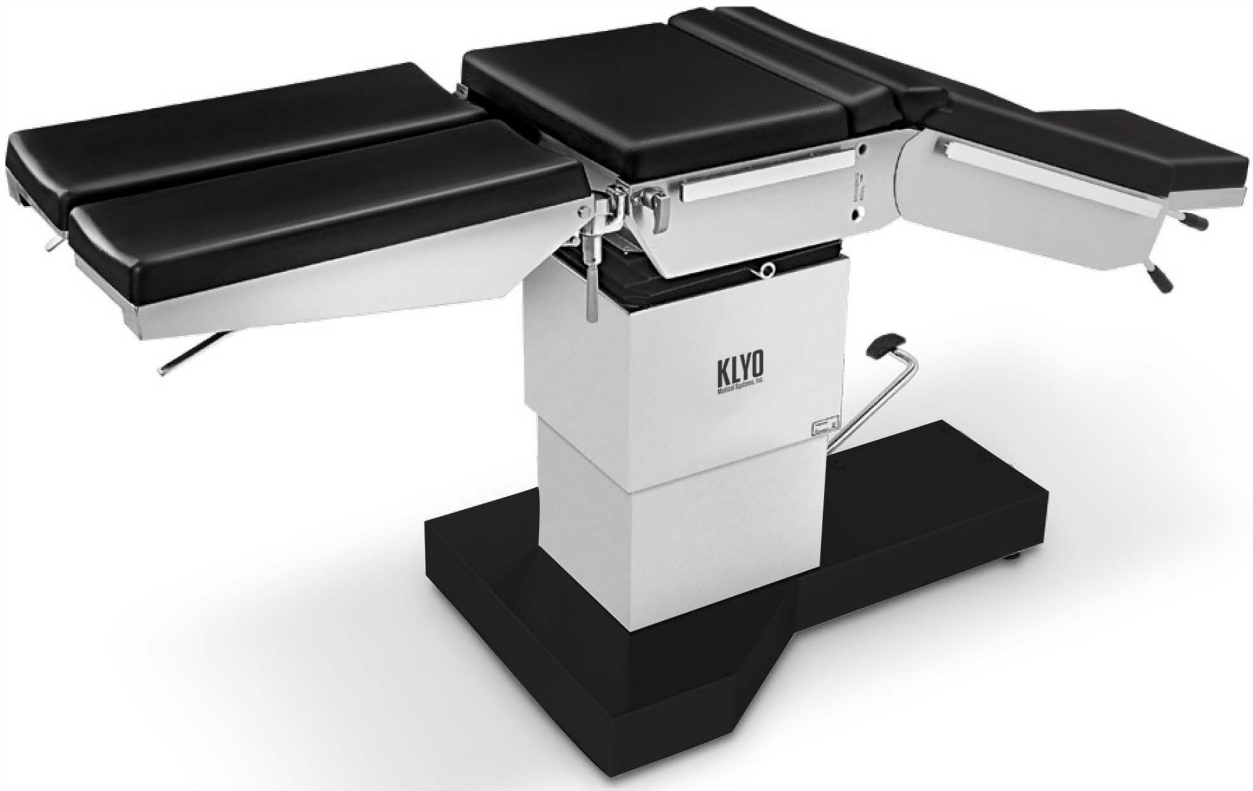

Standard Movements

Standard movements covered in all configurations presented.
We offer the best angles within desired configurations.

Elevation

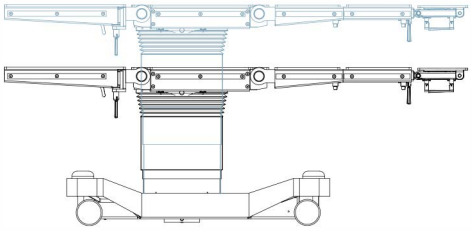

Longitudinal Movement

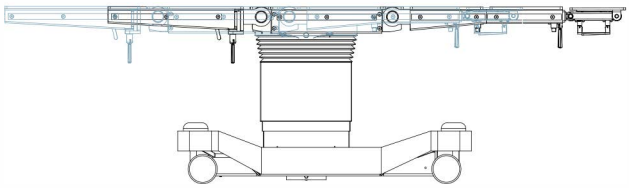

Trendelemburg and reverse

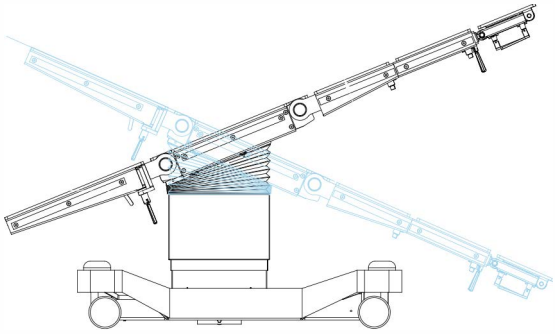

Lateral tilt

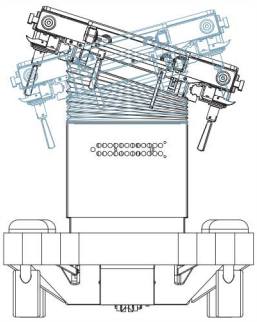

Flex
Reflex

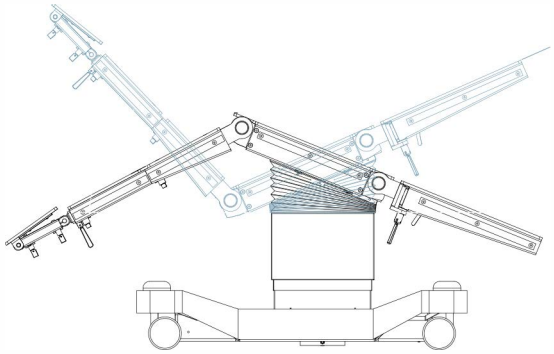

Back, head and leg support

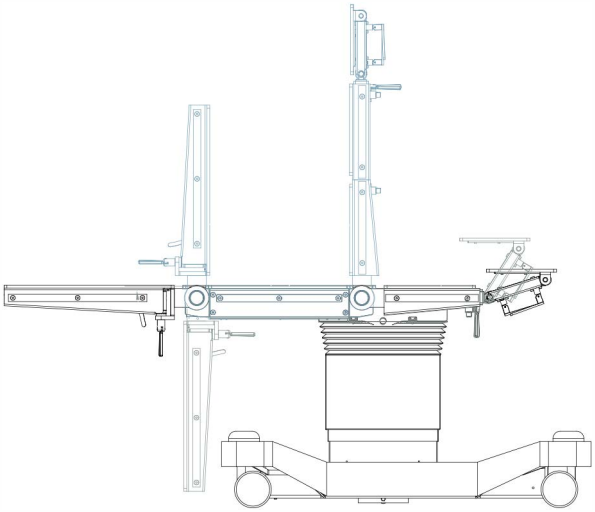

Note: Due to technological advances, the manufacturer reserves the right to modify technical specifications of the product without prior notice.

ACCESORIES
KL-10

Shoulder support

Thigh Support

Narcosis Arc

Arm Support

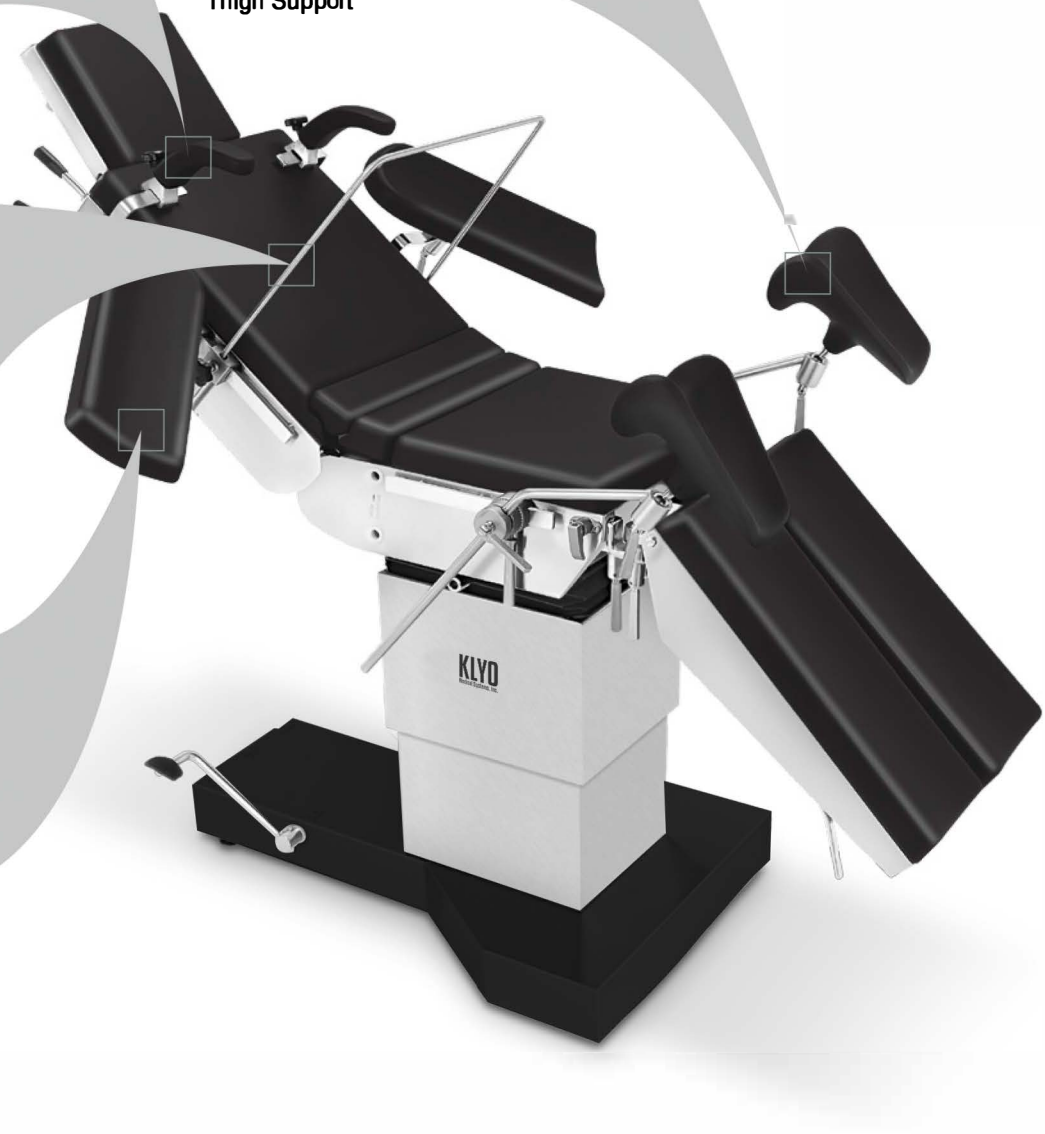

KLYO

Medical Systems, Inc.

www.klyomedical.com
1464 NW 82nd Ave. Miami, FL 33126
sales@klyomedical.com Tel: (305) 330-5025